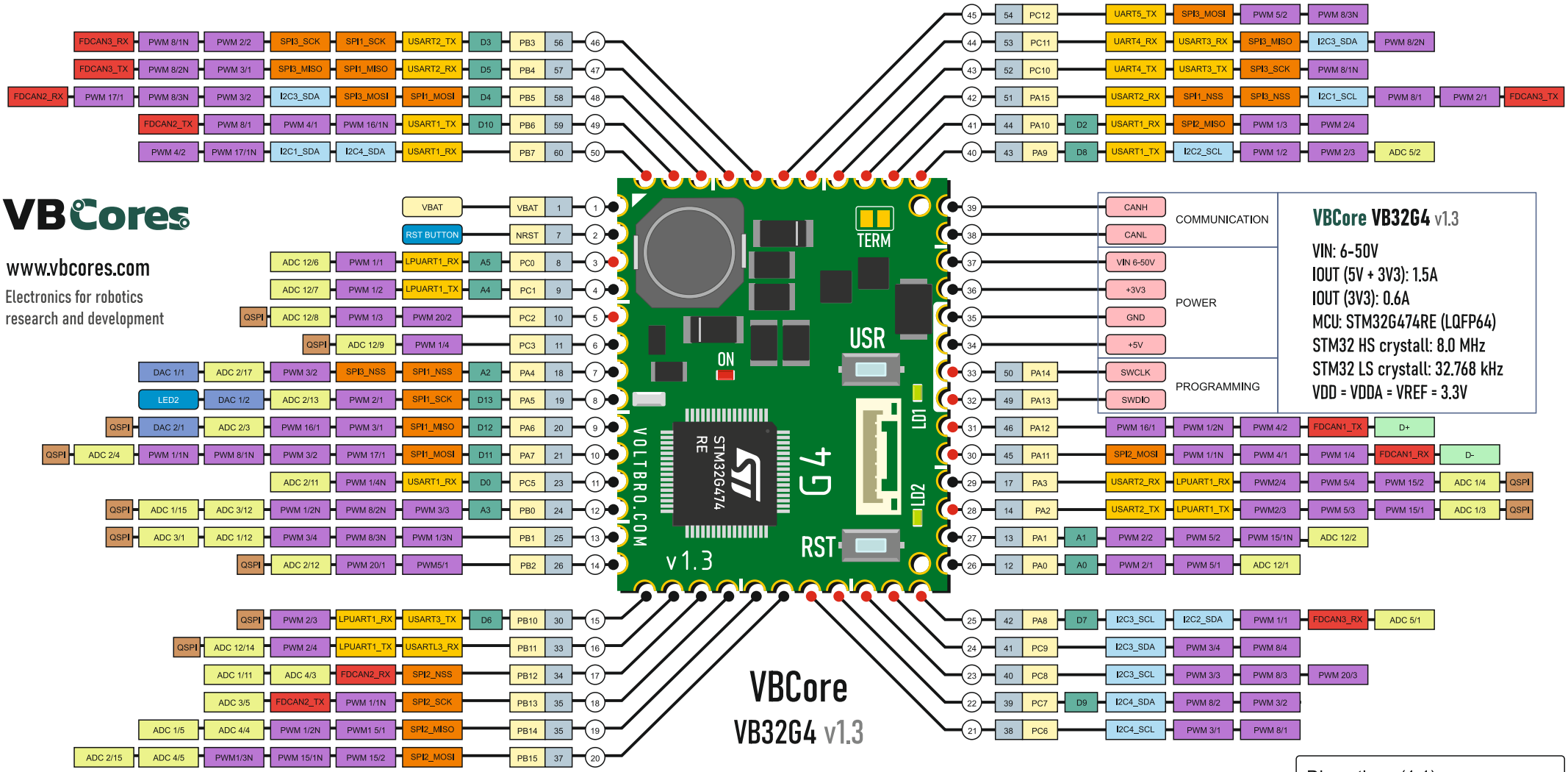

Onboard connections

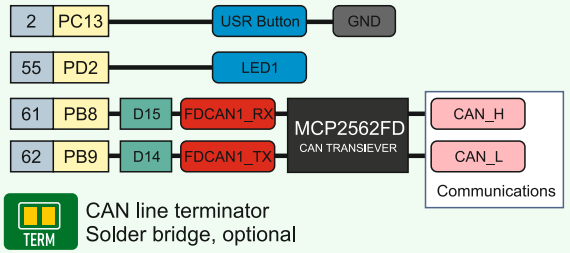

JST GH1.25 connector

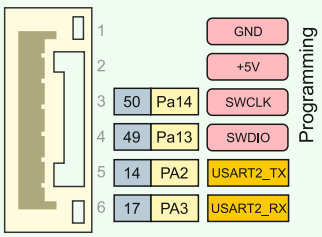

- STM34G474RE LQFP64 Pin number
- STM34G474RE Pin name
- Arduino IDE pin map, (Nucleo-64)
- SPI pins
- I2C pins
- PWM out pins (Timer Number/Channel [N-inverted])
- 5V tolerant I/O
- Serial ports pins (USART/UART/LPUART)
- Analog input (ADC) pins (Num/CH)
- Analog output (DAC) pins (Num/CH)
- CAN pins
- QUADSPI
- VBCore controll pins
- VBCore leds, buttons, etc
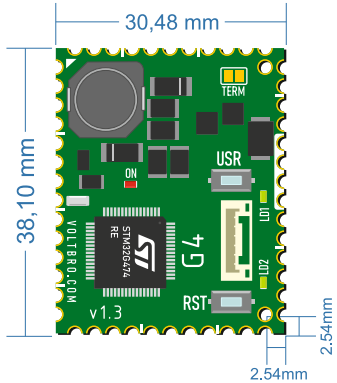
Dimentions (1:1)